SPEC OF AT020P-9

STP-JX-Tip-AT020P-9-A1

GEB Robotic Tips for PerkinElmer Janus® can be used for high-throughput pipetting processes in proteomics, drug development, genomics and other fields.

Product details at-a-glance

GEB Cat#	Max Volume	Tip Color	Low Retention	Sterilized	Filtered (2.5*3.5)mm	Packaging Spec.
AT020P-9-N	20ul	Natural				96 tips/rack, 10 racks /pack, 5 packs / case.50 racks/case, 4800tips/case.
AT020P-9-N-LB	20ul	Natural	Low Retention			
AT020P-9-NS	20ul	Natural		Sterilized		
AT020P-9-NS-LB	20ul	Natural	Low Retention	Sterilized		
AF020P-9-NS	20ul	Natural		Sterilized	Filtered	
AF020P-9-NS-LB	20ul	Natural	Low Retention	Sterilized	Filtered	
AT020P-9-X	20ul	Black				96 tips/rack, 10 racks /pack, 5 packs / case,50 racks/case, 4800tips/case. (Conductive black)
AT020P-9-X-LB	20ul	Black	Low Retention			
AT020P-9-XS	20ul	Black		Sterilized		
AT020P-9-XS-LB	20ul	Black	Low Retention	Sterilized		
AF020P-9-XS	20ul	Black		Sterilized	Filtered	
AF020P-9-XS-LB	20ul	Black	Low Retention	Sterilized	Filtered	
Case dimension L*W*H:500* 285*405mm			Gross Weight：10.0kg			

- ✧ 20μL Liquid Level Sensing Tips
- ✧ 96 Tip/Hanging Tip Rack format
- ✧ Polypropylene
- ✧ Certified DNase/RNase free
- ✧ Nonpyrogenic
- ✧ Presterile/Nonsterile
- ✧ Filtered(Filtered With aerosol-resistant filters)/NonFiltered
- ✧ Endotoxin-Safe meets USP/FDA standards
- ✧ Comply With USP 3127 (Heavy Metal Contamination) standards
- ✧ Compatibility: PerkinElmer Janus®,MultiProbe liquid workstations.

Drawing: 20μl (No tolerance Diameter tolerance：±0.05mm , Height tolerance：±0.25mm)

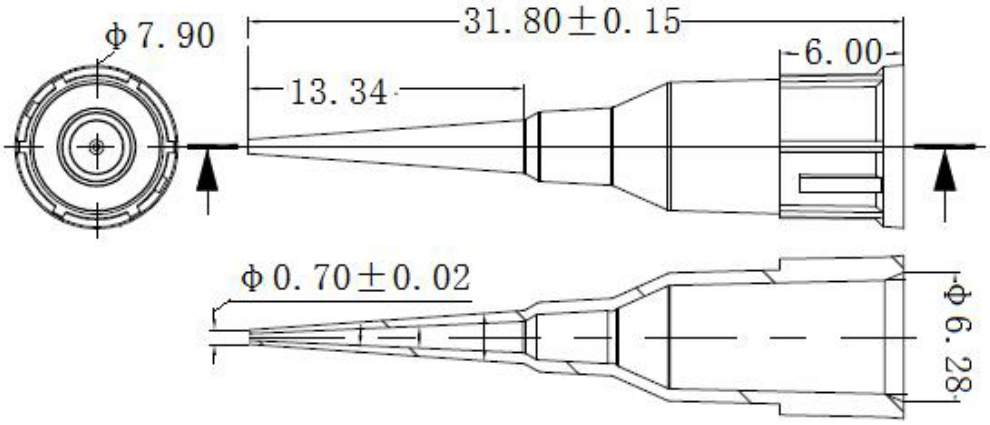

Prepared by: Anne Oct. 27 , 2020 Approve：WeiMing Yu Oct.27, 2020